Soaring Electrics For Idiots/Dummies "Made Easier"

Wiring Avionics

© 2012 John H. DeRosa

To Be Covered

- Wires and wiring
- Batteries, types & testing
- Power control
- Breakers & Fuses
- Switches
- Connectors and connecting
- Securing cabling
- Trailer Wiring
- Antenna connections and Coax
- In flight entertainment systems

© 2012 John H. DeRosa

Disclaimers

- I am a BSEE and MSCS
- I am **not** an A&P, an IA or a licensed avionics technician
- Know the difference between Experimental & Standard airworthiness certificates
- Proceed at your own risk
- Get your work inspected and signed off in the ship's log book

© 2012 John H. DeRosa

Turn This…

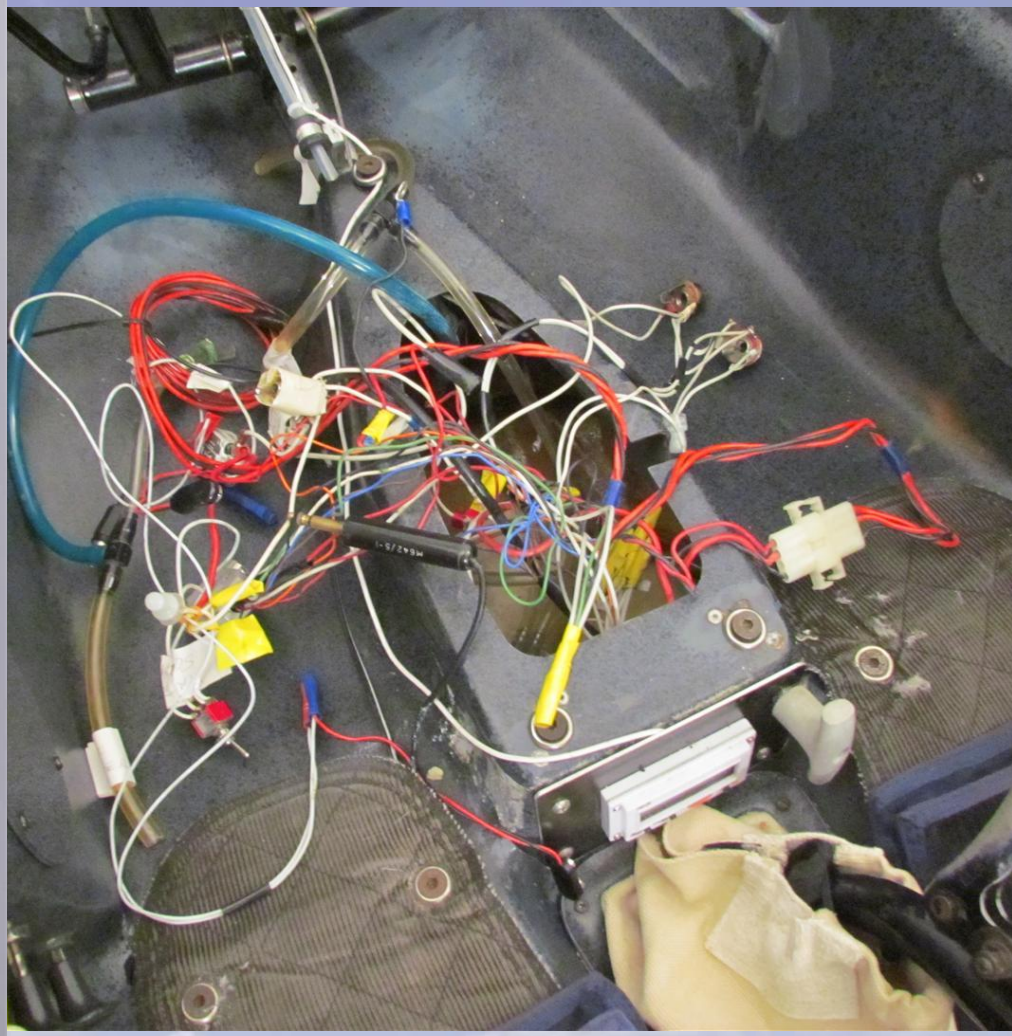

…Into This

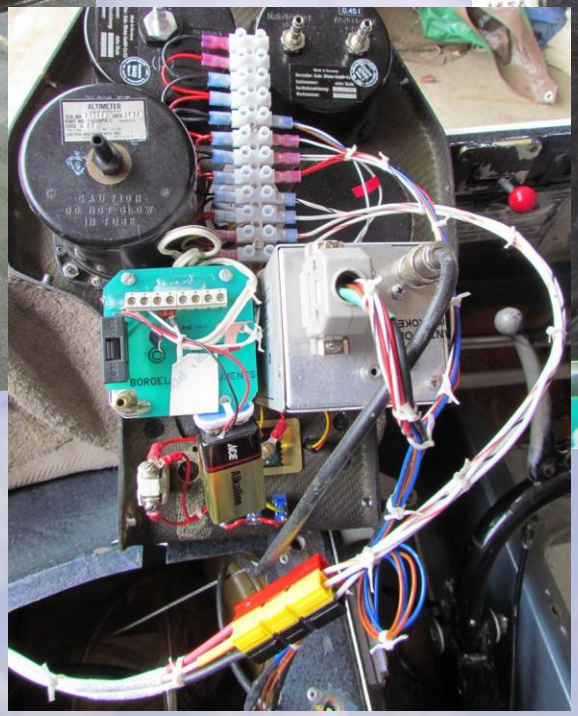

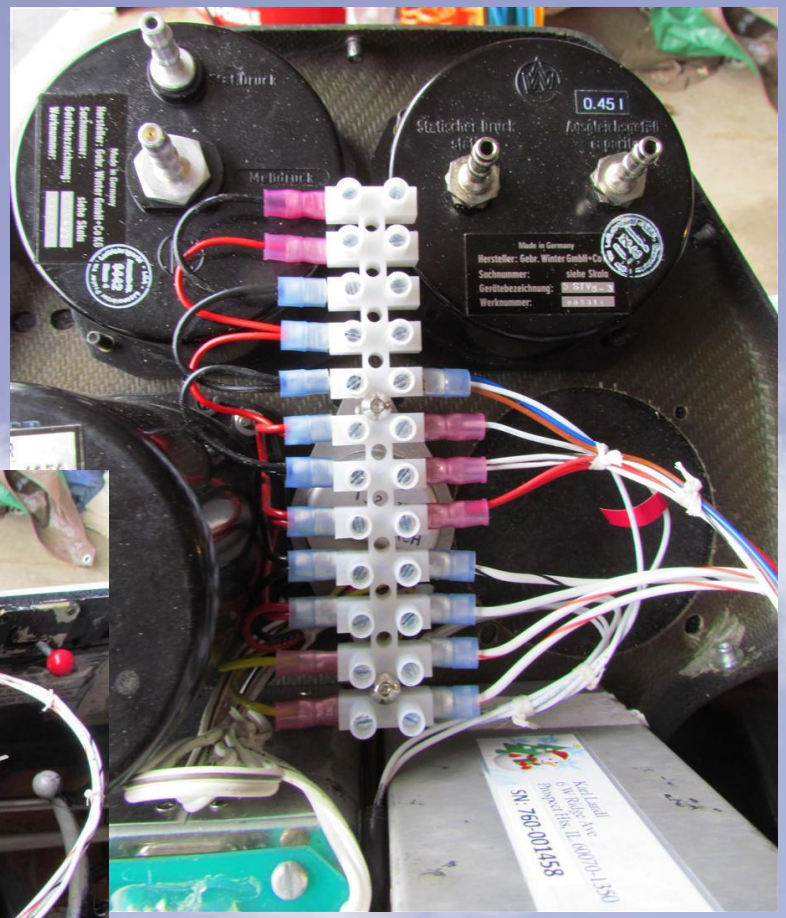

© 2012 John H. DeRosa

Reference Docs

- **FAA**
  - **Bible ➔ AC 43-13-1B → Chapter 11**
  - **"Aircraft Electrical Wiring Interconnect System (EWIS) Best Practices"**
- **Aviation Mechanics Handbook**
- **EAA Videos**
  - **http://www.eaavideo.org ➔ Electrical**
- **Keybridge Technologies "Aircraft Wiring Practices"**

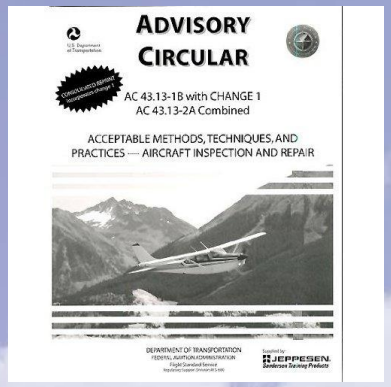

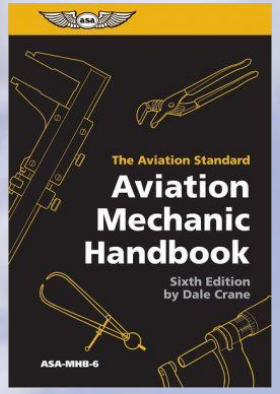

All the above can be found online

© 2012 John H. DeRosa

Wire

- In two words ➔ **USE Tefzel!**
  - High melting temperature
  - Abrasive resistant
- Mil-spec
  - Unshielded - MIL-W-22759
  - Shielded - MIL-C-27500
- Sources
  - Aircraft Spruce
  - Wings & Wheels
- Cost – A little more but worth it!

© 2012 John H. DeRosa

Tefzel Wire

Fluorocopolymer thermoplastic material has excellent electrical properties, heat resistance, chemical resistance, toughness, radiation resistance, and flame resistance.

For many years the standard hookup wire in light aircraft has been MIL-W-5086A, which calls for use of tin-coated copper conductor rated at 600 volts and temperatures of 105°C. This basic wire is then coated with various insulating coatings including PVC. There has been much discussion during the past few years about the use of wire with PVC in aircraft. The Air Force does not permit such wire to be used in military aircraft due to the toxic fumes generated in the event of a fire which can disable the crew. Although there is no formal restriction on the use of MIL-W-5086A wire as of early 1991, as our supplies of MIL-W-5086A wire are depleted we will now be supplying MIL-W-22759/16 wire which complies with current military and anticipated future FAA requirements.

© 2012 John H. DeRosa

Suggested Wire Gauges

For Gliders

It ain't the current capacity (necessarily) it's the voltage drop!

- **10 to 14 gauge** - Main power lead from battery to distribution block
  - **Voltage drop for 20 feet of 14ga wire at 2A = ~0.12V**
- **16 to 18 gauge** - Power lead from distribution block to individual devices
  - **Voltage drop for 20 feet of 18ga wire at 2A = ~ 0.24V**
- **18 to 20 gauge -** Speaker wiring
  - **Voltage drop for 20 feet of 20ga wire at 2A = ~ 0.40V**
- **22 to 26 gauge -** Control wires such as push-to-talk, air brake switch, etc
  - **Voltage drop for 20 feet of 20ga wire at 2A = ~ 0.60V**

© 2012 John H. DeRosa

Wire Gauge versus Current

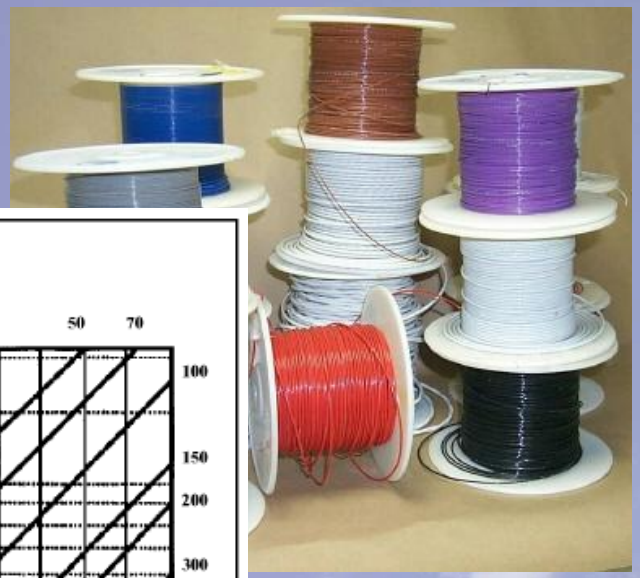

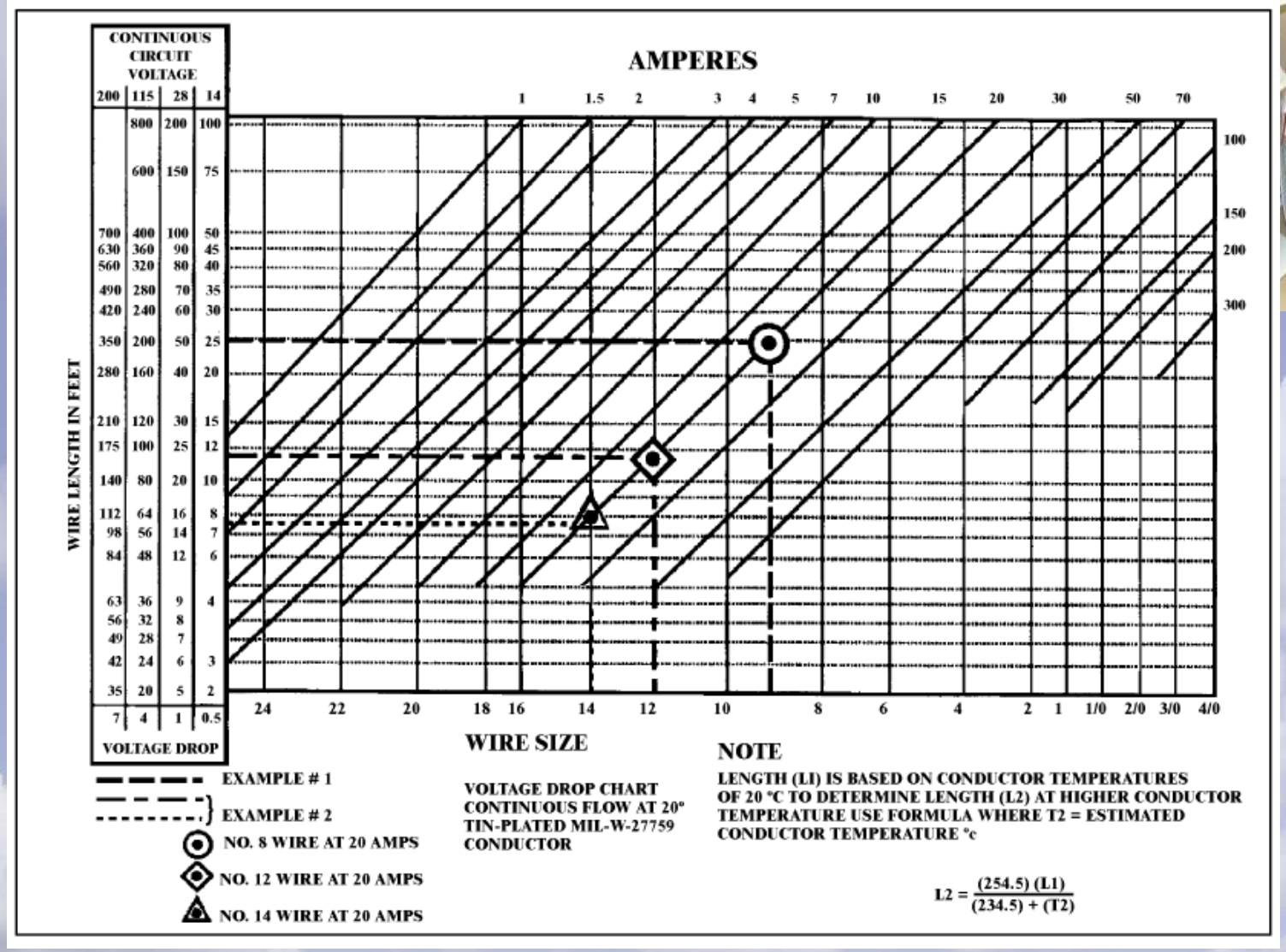

From AC43-13-1B Table 11-2

© 2012 John H. DeRosa

Suggested Wire Gauges

TABLE 11-9. Current carrying capacity and resistance of copper wire.

Wire Size	Continuous duty current (amps)-Wires in bundles, groups, harnesses, or conduits. (See Note #1) Wire Conductor Temperature Rating			Max. resistance ohms/1000ft@20 °C tin plated conductor (See Note #2)	Nominal conductor area - circ.mils
	105 °C	150 °C	200 °C		
24	2.5	4	5	28.40	475
22	3	5	6	16.20	755
20	4	7	9	9.88	1,216
18	6	9	12	6.23	1,900
16	7	11	14	4.81	2,426
14	10	14	18	3.06	3,831
12	13	19	25	2.02	5,874
10	17	26	32	1.26	9,354
8	38	57	71	0.70	16,983
6	50	76	97	0.44	26,818
4	68	103	133	0.28	42,615
2	95	141	179	0.18	66,500
1	113	166	210	0.15	81,700
0	128	192	243	0.12	104,500
00	147	222	285	0.09	133,000
000	172	262	335	0.07	166,500
0000	204	310	395	0.06	210,900

Note #1: Rating is for 70°C ambient, 33 or more wires in the bundle for sizes 24 through 10, and 9 wires for size 8 and larger, with no more than 20 percent of harness current carrying capacity being used, at an operating altitude of 60,000 feet. For rating of wires under other conditions or configurations see paragraph 11-69.

Note #2: For resistance of silver or nickel-plated conductors see wire specifications.

From AC43-13-1B Table 11-9

© 2012 John H. DeRosa

Wire Labeling

- **FAA: Each wire must be individually labeled with a number and/or function to allow tracing.**
- **Simplest Method;**
  - **Print names/numbers on plain paper**
  - **Cut out the individual labels**
  - **Place label under clear heat shrink**
  - **Simple & Effective!**

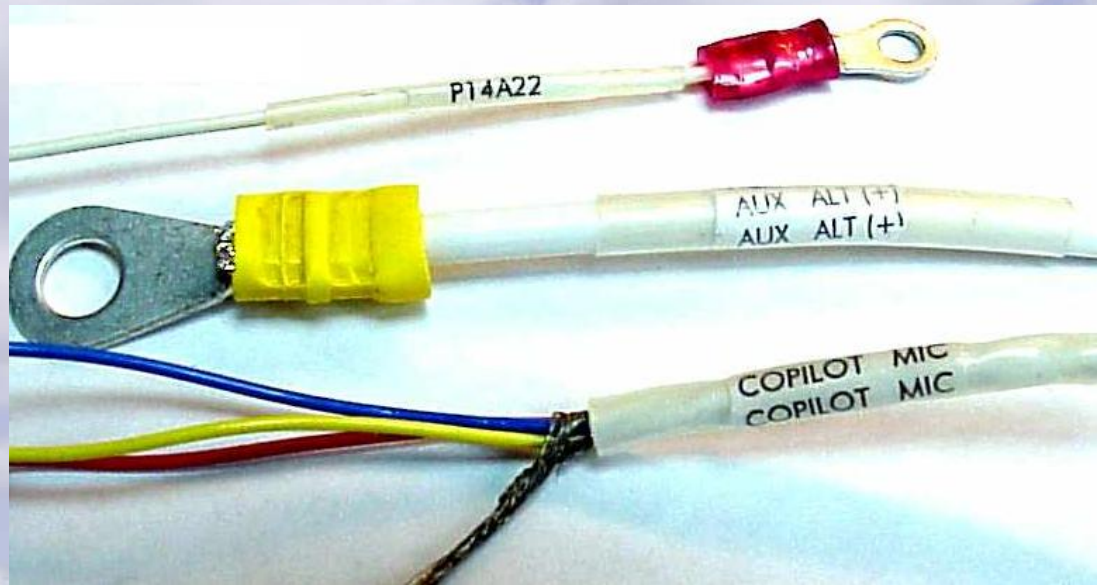

© 2012 John H. DeRosa

Compression Terminals

- Get good quality from reliable sources
- Brand names AMP, Tyco
- Nylon not plastic
- Sources: Aircraft Spruce, Chief Aviation

Ratcheting Crimping Tool $20-$50

© 2012 John H. DeRosa

Compression Terminals

- Nylon Insulation ➔
  - Translucent
  - Flexible
  - Heat resistant

- Plastic Insulation ➔
  - Opaque
  - Brittle
  - Melts easily

Color	Small	Large
Red	#22 - #18	#8, #2
Blue	#16 - #14	#6
Yellow	#12 - #10	#4

© 2012 John H. DeRosa

Disconnects

Faston

Knife Disconnects

Cannon

DIN

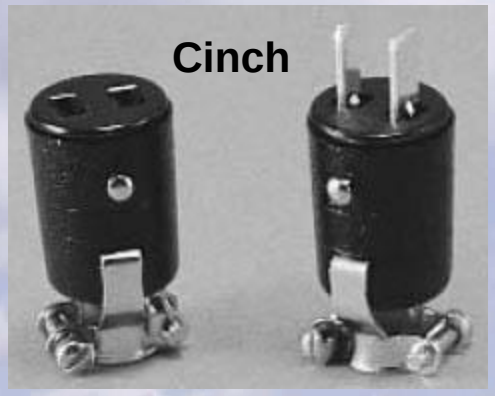

Cinch

© 2012 John H. DeRosa

Disconnects - Powerpole

http://www.powerwerx.com/anderson-powerpoles

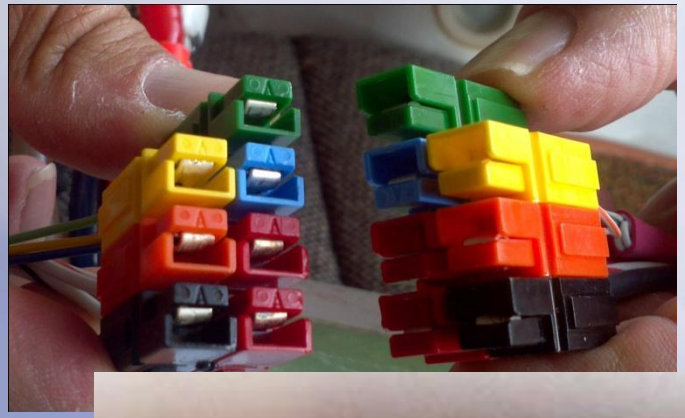

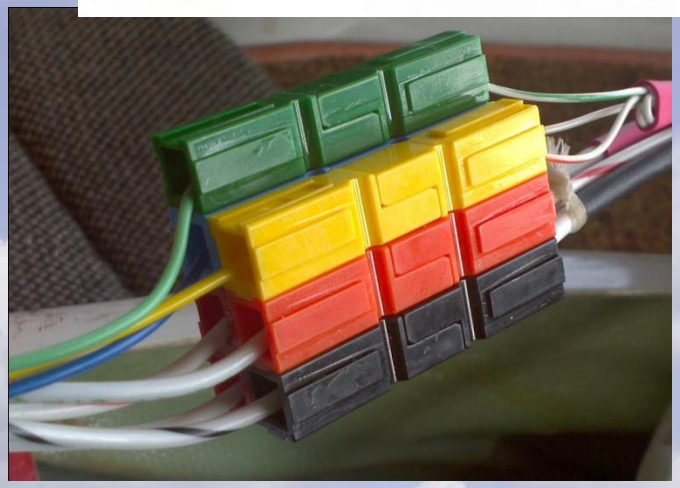

- Wiping silver contacts
- Positive Locking
- Polarized
- Genderless
- Customizable
- Multiple colors available
- Rugged
- High current capacity
- High temperature housing

© 2012 John H. DeRosa

Switches

- Get good quality from reliable sources
- Brand names
  - Switchcraft
  - Bussman
  - Microswitch
  - C&K
  - NKK
- Attributes
  - Sealed Switches
  - Gold Contacts
  - Screw Terminals
    - Easier repair, less vibration prone

© 2012 John H. DeRosa

Switch Derating

Derating Factors. Table 11-4 provides an approximate method for derating nominal ratings to obtain reasonable switch efficiency and service life under reactive load conditions.

WARNING: Do not use AC derated switches in DC circuits. AC switches will not carry the same amperage as a DC switch.

TABLE 11-4. Switch derating factors.

Nominal System Voltage	Type of Load	Derating Factor
12 VDC	Lamp	5
12 VDC	Inductive (relay-solenoid)	2
12 VDC	Resistive (Heater)	1
12 VDC	Motor	2

Source: AC 43-13-1B

© 2012 John H. DeRosa

Heat Shrink

- Get good quality
  - Flat colored, not shiny
- Get several colors and sizes
- High shrinkage
- Sources: Ham radio and electronics parts web sites (Frys).
- Use a heat gun slowly to prevent damage to wires

© 2012 John H. DeRosa

Protecting Against Abrasion

Vinyl Tubing

Needs to Meet Spec. MIL-I-63ID or MIL-I-7444B

Rylon Expandable Sleeving

FAR Part 25 flame retardant
aka “Shark Skin”

© 2012 John H. DeRosa

Breakers Vs. Fuses

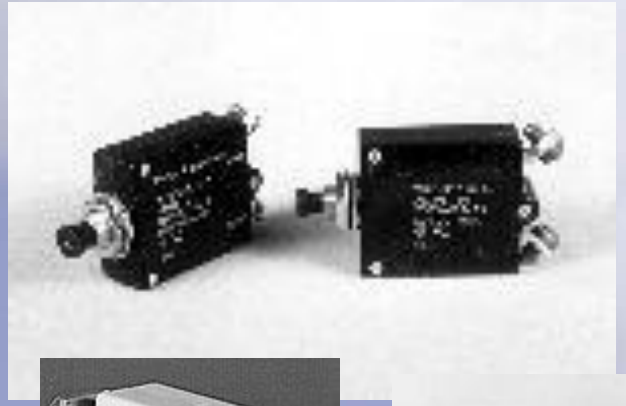

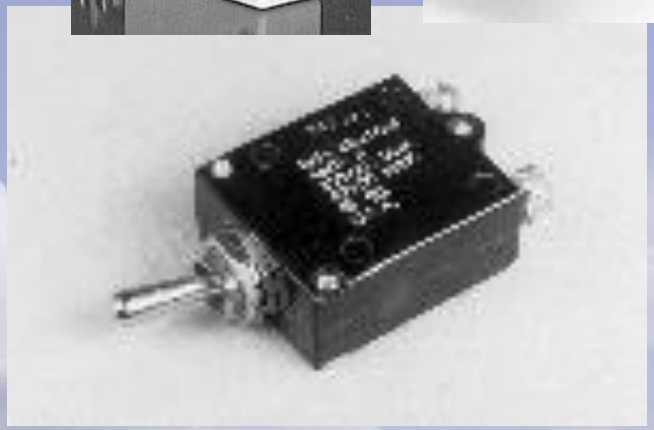

- Types of Breakers
  - No manual trip feature ← don't use!
  - Manual trip feature
  - Integral Switch
- Glass Fuses
  - Difficult to fix in flight
  - Glass is fragile
  - Slow-blow ← don't use!
- Breakers
  - Must be able to pull to trip
  - Can be reset in flight
  - Excessive Voltage Drop?
- Debate: Do fuses protect the wire or do fuses protect the device? Both?

© 2012 John H. DeRosa

Fuses and Breakers

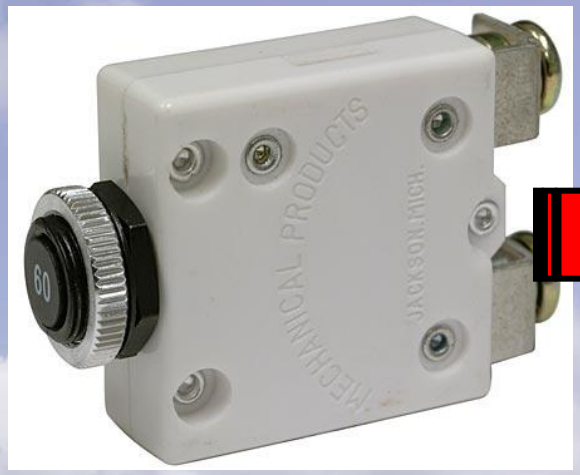

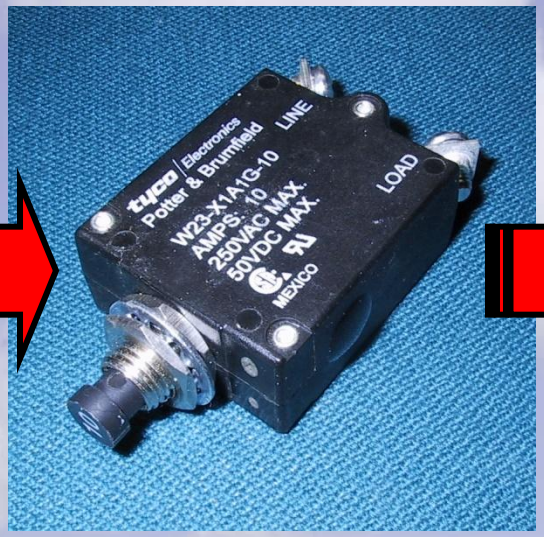

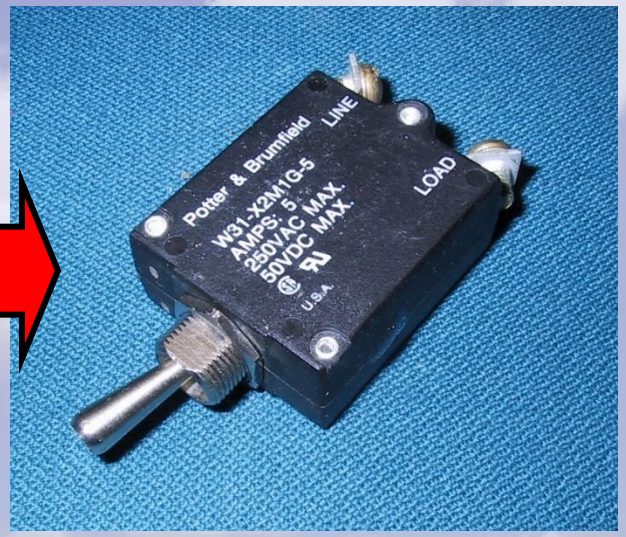

Old Type - Push Only

Newer – Push/Pull
(should not be used as a switch)

Newer - Switch & Breaker

© 2012 John H. DeRosa

Breakers - Problem: Voltage drop

Klixon Breakers Voltage Drop	
Amp Rating	**Max. Voltage Drop**
½	2.00Vdc
¾	1.45Vdc
1	1.10Vdc
1½	0.75Vdc
2	0.70Vdc
2½	0.50Vdc
3	0.33Vdc
4	0.30Vdc
5	0.25Vdc
7½	0.20Vdc
10	0.15Vdc
15	0.15Vdc
20	0.15Vdc

!! !

All Electronic Breakers

http://www.bridgingworlds.com/
0.1Vdc Voltage Drop
Protection: Over Current, Under & Over Voltage

© 2012 John H. DeRosa

Terminal Strips

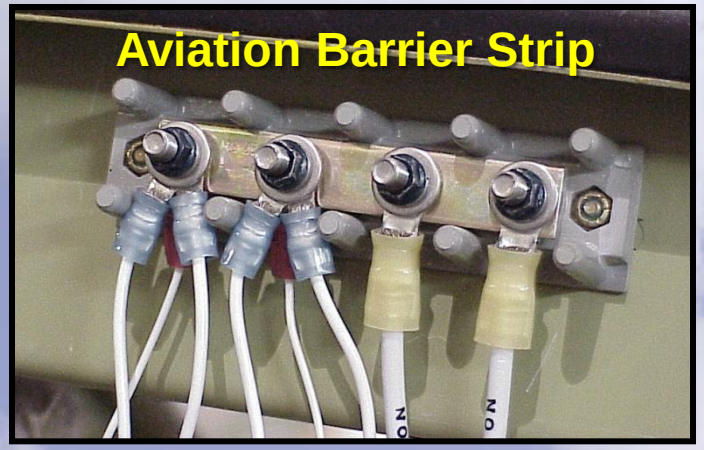

No simple "Radio Shack" plastic barrier strips

© 2012 John H. DeRosa

What Tools Do I Need?

- Voltmeter (continuity and voltage)
- Screwdrivers
- Wire Strippers (sharp)
- Diagonal cutters
- Crimpers (ratching)
- Needle Nose Pliers
- Soldering Iron and Solder

© 2012 John H. DeRosa

Cable Lacing

Wax impregnated
Nylon Tape
500 yards
$20

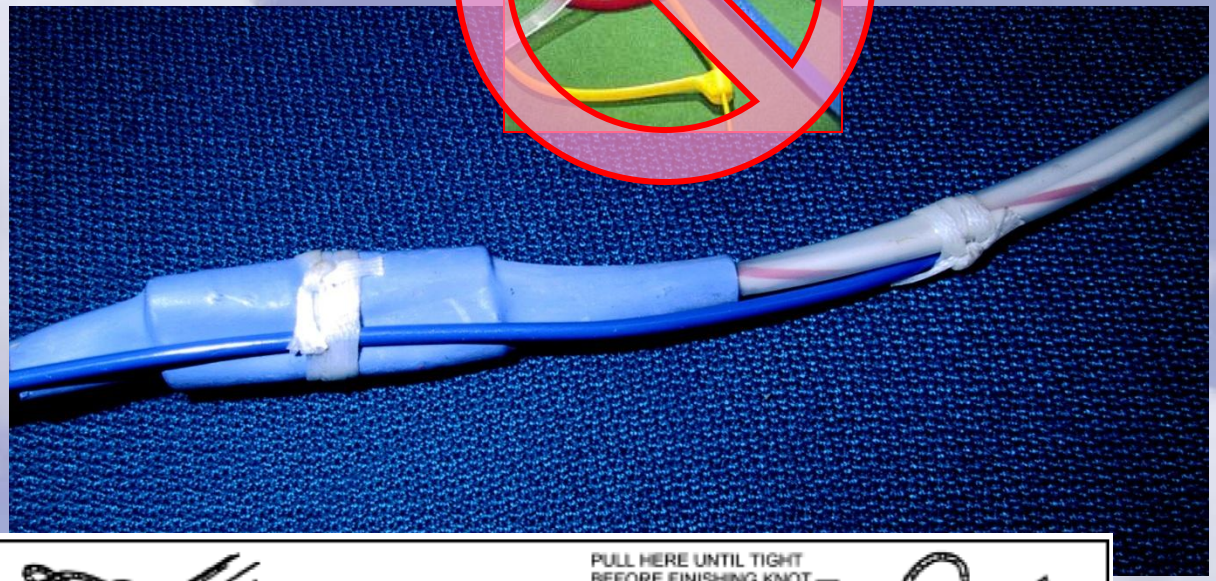

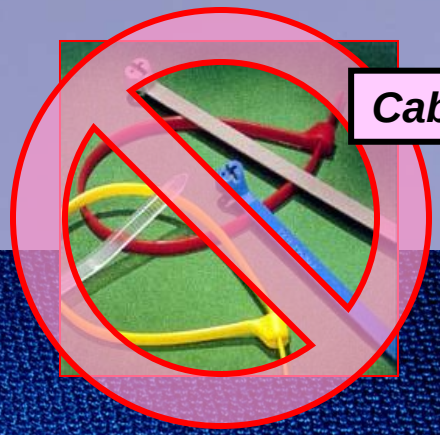

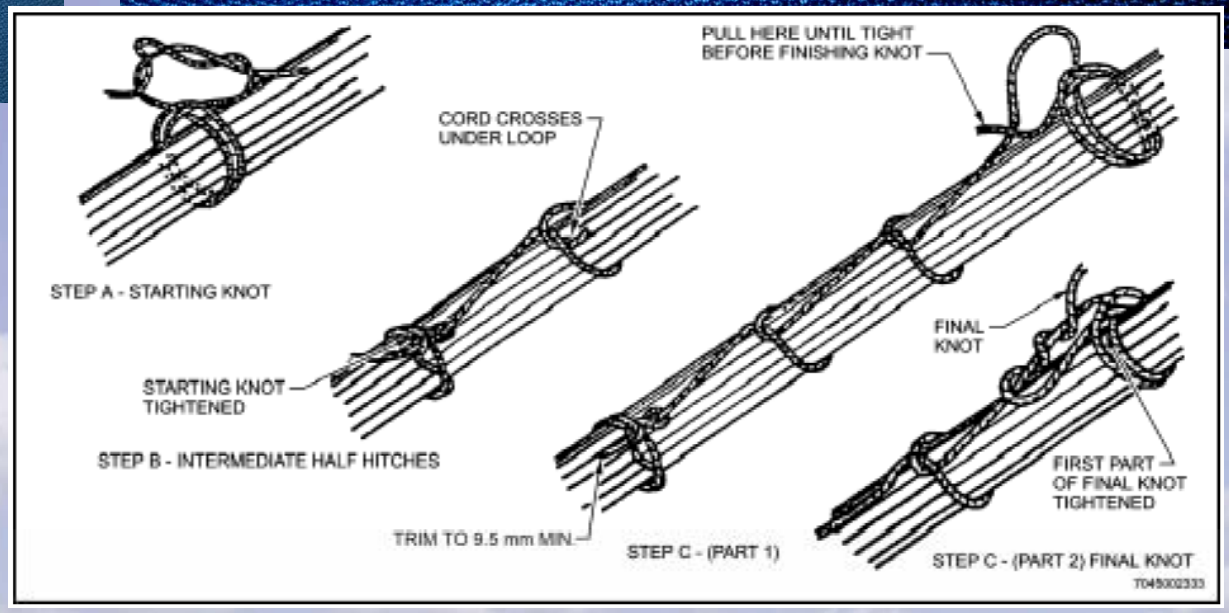

© 2012 John H. DeRosa

Power and Batteries

- Voltages needed
  - Older systems needed 14Vdc
  - Modern equipment needs only 12Vdc (~11-15Vdc)
- Voltage X Amperage = Power
  - Water volume versus water pressure
  - Voltage Drop – shorter, bigger wires
- Watch the voltage drop
- Types of Batteries…

© 2012 John H. DeRosa

Batteries

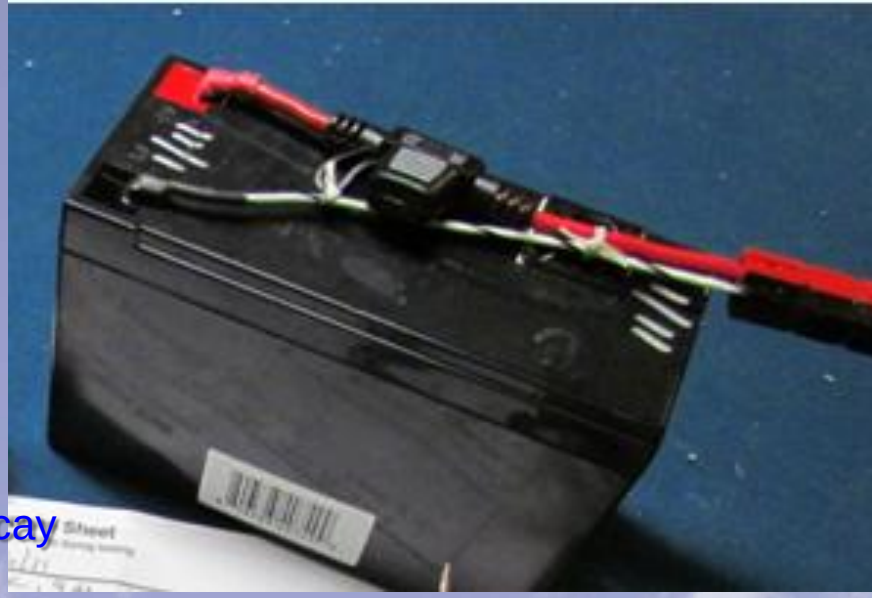

- Fuse at Positive Terminal!!
- Types
  - Lead Acid Jell Cells
    - Heavy, no 0Vdc, high power, voltage decay
  - Nickel-Cadmium (Ni-Cd)
    - Memory, no maintenance, flat voltage profile
  - Nickel-Metal-Hydride (NiMH)
    - No memory, no maintenance, flatter voltage profile
  - Lithium (Li)
    - Light weight, small, fire risk if shorted, expensive, flattest voltage profile
- Chargers – Smart type
  - Not simple brick style
- Amp hour rating
  - 9AH = 9 amps of current draw for one hour

© 2012 John H. DeRosa

How Long Will My Battery Last?

- Current Draw of Equipment
  - Radio – 1.6A (during transmit)
  - Variometer – 0.2A (with audio)
  - Flight Computer – 0.4A (with audio)
  - PDA – 0.5A (during charging with backlight)
  - **Total maximum current draw = 2.7A**

Never all on at the same time

- Battery Capacity = 9.0Ah
- Battery Charge Life Span
  - 9.0Ah ÷ 2.7A = 3.33 hours
    (with everything running at once – which never happens)
- Transponder?
  - Very heavy power draw – Transmits ident code quite often

© 2012 John H. DeRosa

Battery Load Testing

- Find a load resistor to simulate a realistic current draw to test capacity of battery. Reasonable example is ≈1 Amp.
- Steps to determine size of resistor
  - Determine total maximum current draw
  - Divide 12VDC by the total power draw is the resistor size; R=E/I (ohms law)

    Example: 12Vdc/1A = 12Ω
- Need a “Power” Resistor
  - Wattage of resistor = E x I = 12Vdc X 1A ≈ 12W
- Therefore need a 12Ω, 12 Watt “power” resistor

© 2012 John H. DeRosa

Battery Load Testing

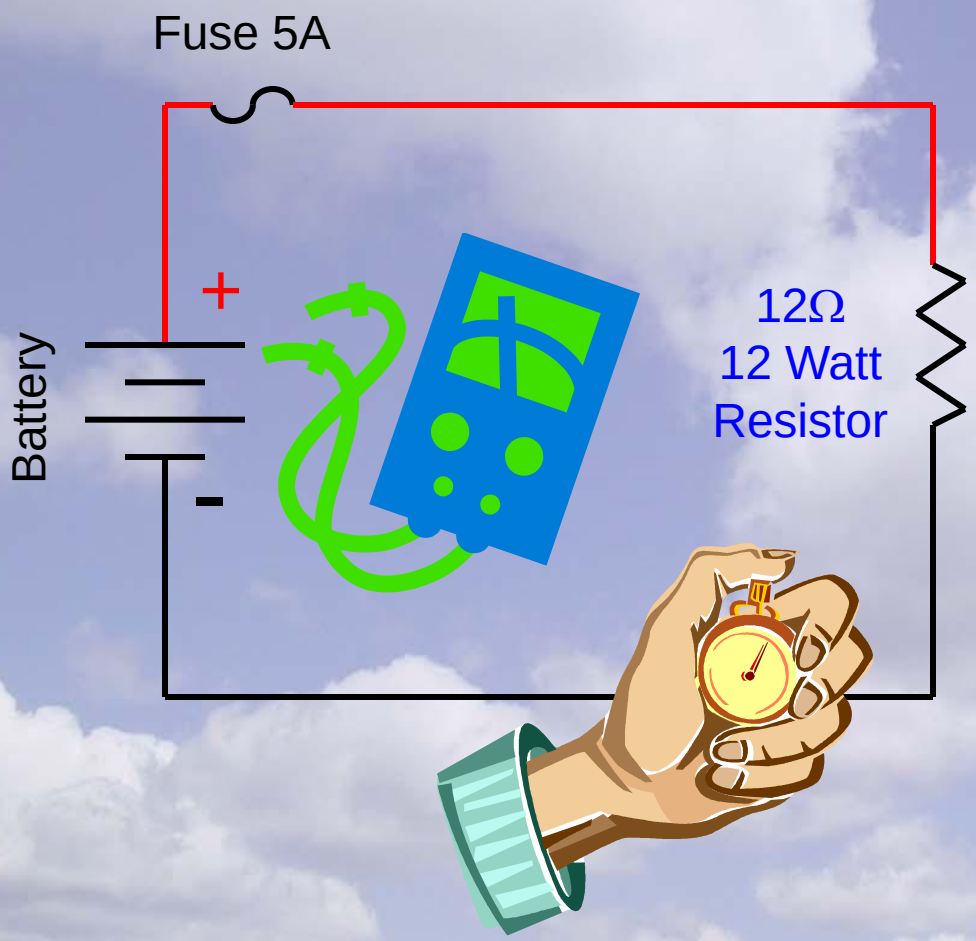

1) **Charge Battery Overnight**
2) **Connect Voltmeter Across Battery**
3) **Connect Resistor Across Battery**
4) **Use Stopwatch to time until drops to ~11.5VDC**

© 2012 John H. DeRosa

Battery Load Testing

See *Soaring* for more details – February 2012

© 2012 John H. DeRosa

Warning!
HOT!!

Power resistors can get very hot when used as a battery load

© 2012 John H. DeRosa

Sample Load Test - Gel Cell

Battery Testing Data Capture Sheet

Testing Description April 9, 2011 - Battery: 12VDC 9AH Gel Lead Acid, dated 9/04. Load - 10Ω 20Watt resistive (~1.2A @ 12Vdc)

Time (HH:MM)	Voltage (Vdc)	Duration (HH:MM)
08:50	12.50	0:00
09:04	12.13	0:14
09:22	12.07	0:32
09:27	12.04	0:37
09:37	12.01	0:47
10:00	11.90	1:10
10:14	11.84	1:24
10:25	11.79	1:35
10:40	11.71	1:50
10:44	11.69	1:54
10:55	11.63	2:05
11:02	11.59	2:12
11:16	11.52	2:26
11:28	11.45	2:38
12:25	11.00	3:35
12:36	10.84	3:46
12:43	10.19	3:53
13:20	7.73	4:30
13:41	6.10	4:51

Enter data in the yellow cells only

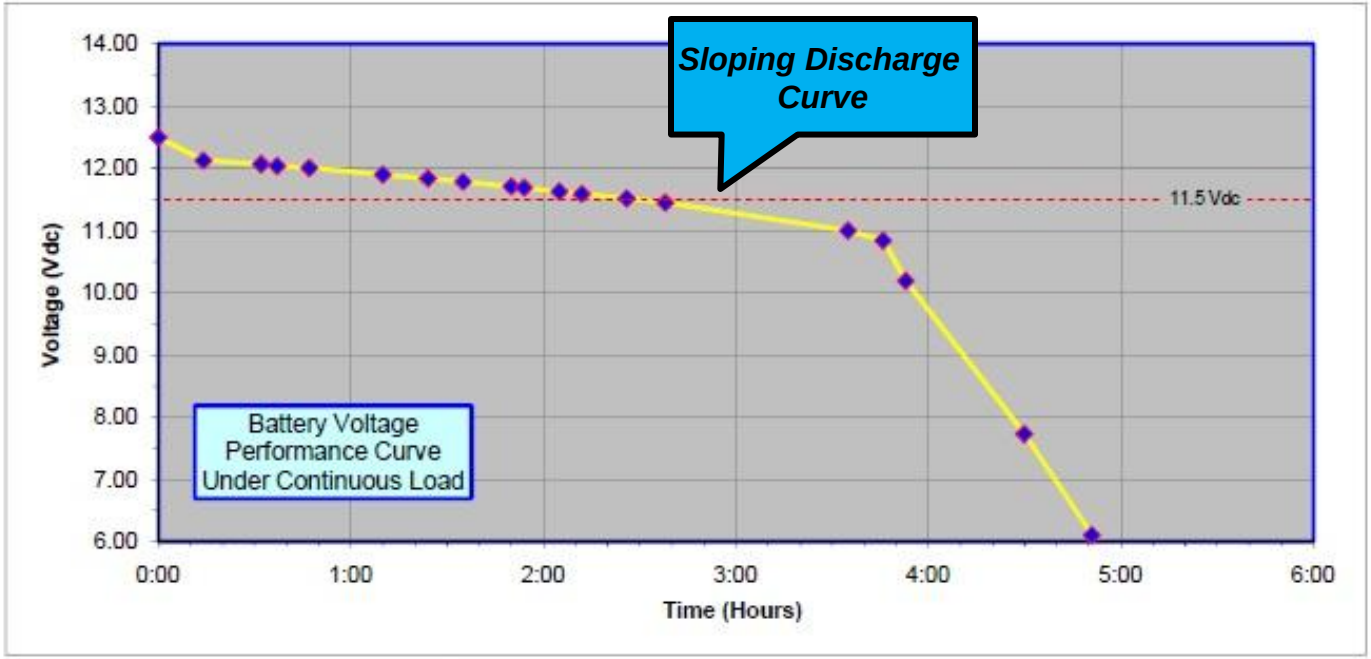

How to Use this Spreadsheet

Hint: For ease of identification, uniquely mark each battery, i.e. the date it was purchased.

1) Note the date, battery type, unique identifier and other details in row 3.
2) Save-as the spreadsheet and indicate the battery type, unique identifier and test date in the filename.
3) Delete the contents of the yellow colored cells (select the contents and hit "delete").
4) Fully charge the battery. Connect a resistive load to the battery and a voltmeter.
5) Take a voltage reading and note the time the reading was taken.
6) Enter the voltage reading in column D.
7) Enter the clock time of your voltage reading in column C in HH:MM 24-hour format (i.e. 9AM = 09:00, 9PM = 21:00).
8) Repeat steps 5 through 7 every 10-15 mintues until the voltage of the battery drops to approximately 11.5Vdc or lower. (NOTE: 11.5Vdc is a somewhat arbitrary minimum voltage for avionics use - refer to your avionics owner's manuals).
9) Save the spreadsheet and print it for your records.

WARNING Do not leave the battery connected to a load for an extended period of time. This can ruin the battery.

© 2012 John H. DeRosa

Sample Load Test – LiFe-Po

Flatter Discharge Curve than Gel Cell

16
14
12
10
8
6
4
2
0

0 0:02 0:06 0:16 0:31 0:51 1:13 1:32 1:46 1:51

Voltage
Amps
Ah

Source: Herb Kilian

© 2012 John H. DeRosa

Sample Power Distribution Circuits

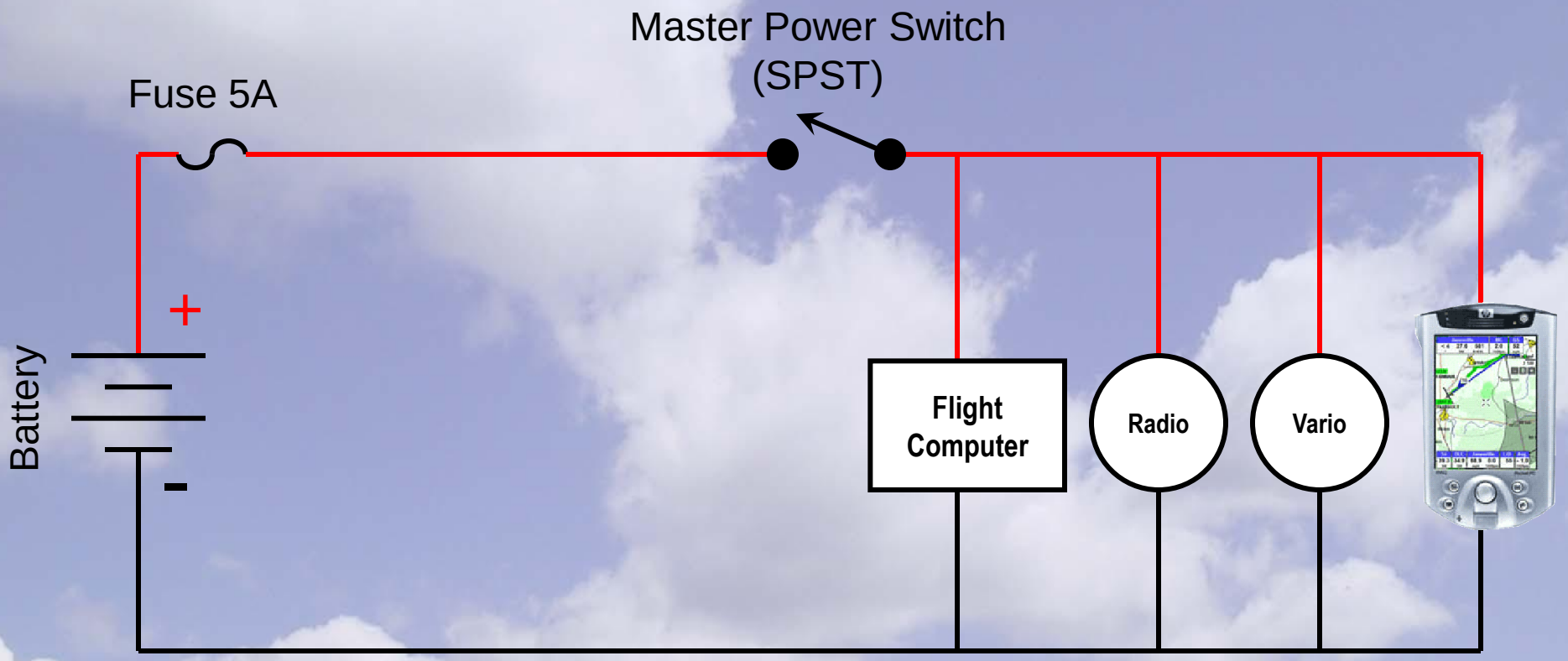

Note: Breakers can be used in place of Fuses

© 2012 John H. DeRosa

Sample Power Distribution Circuits

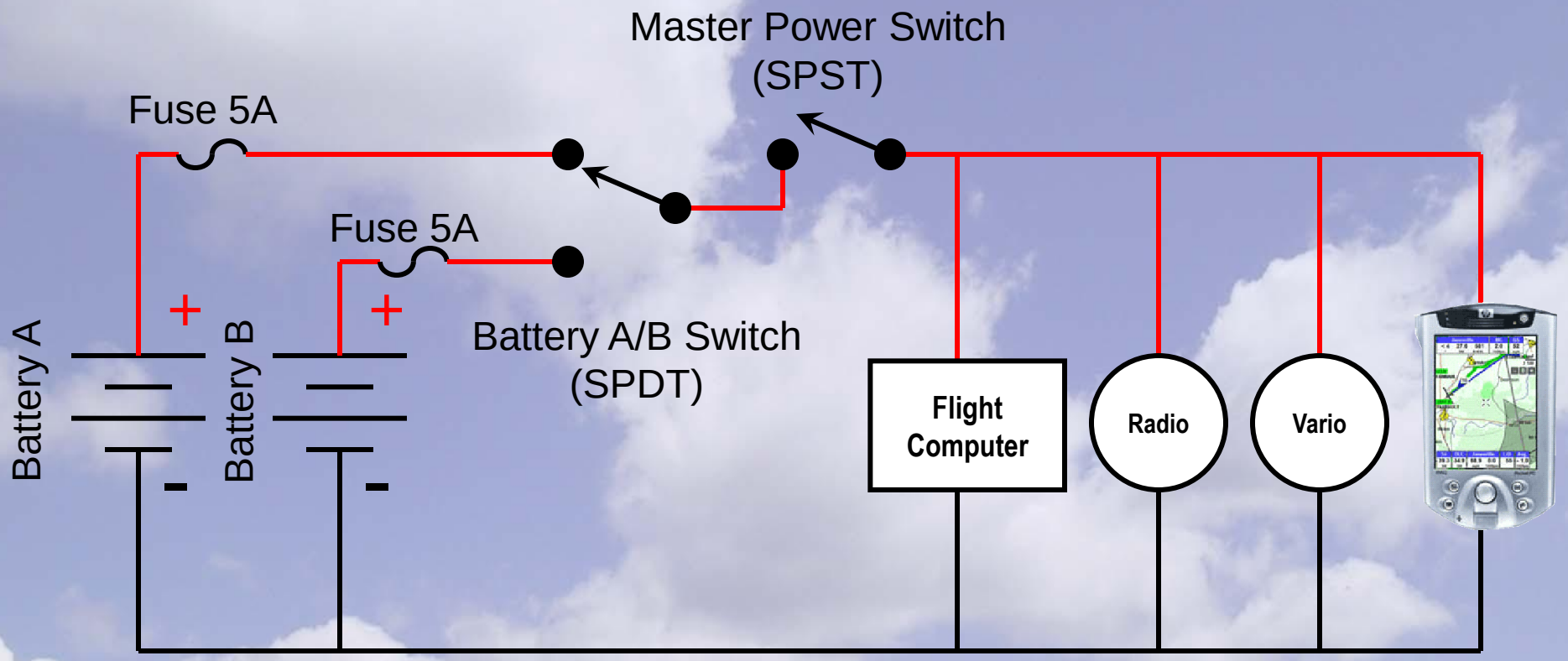

Note: Breakers can be used in place of Fuses

© 2012 John H. DeRosa

Sample Power Distribution Circuits

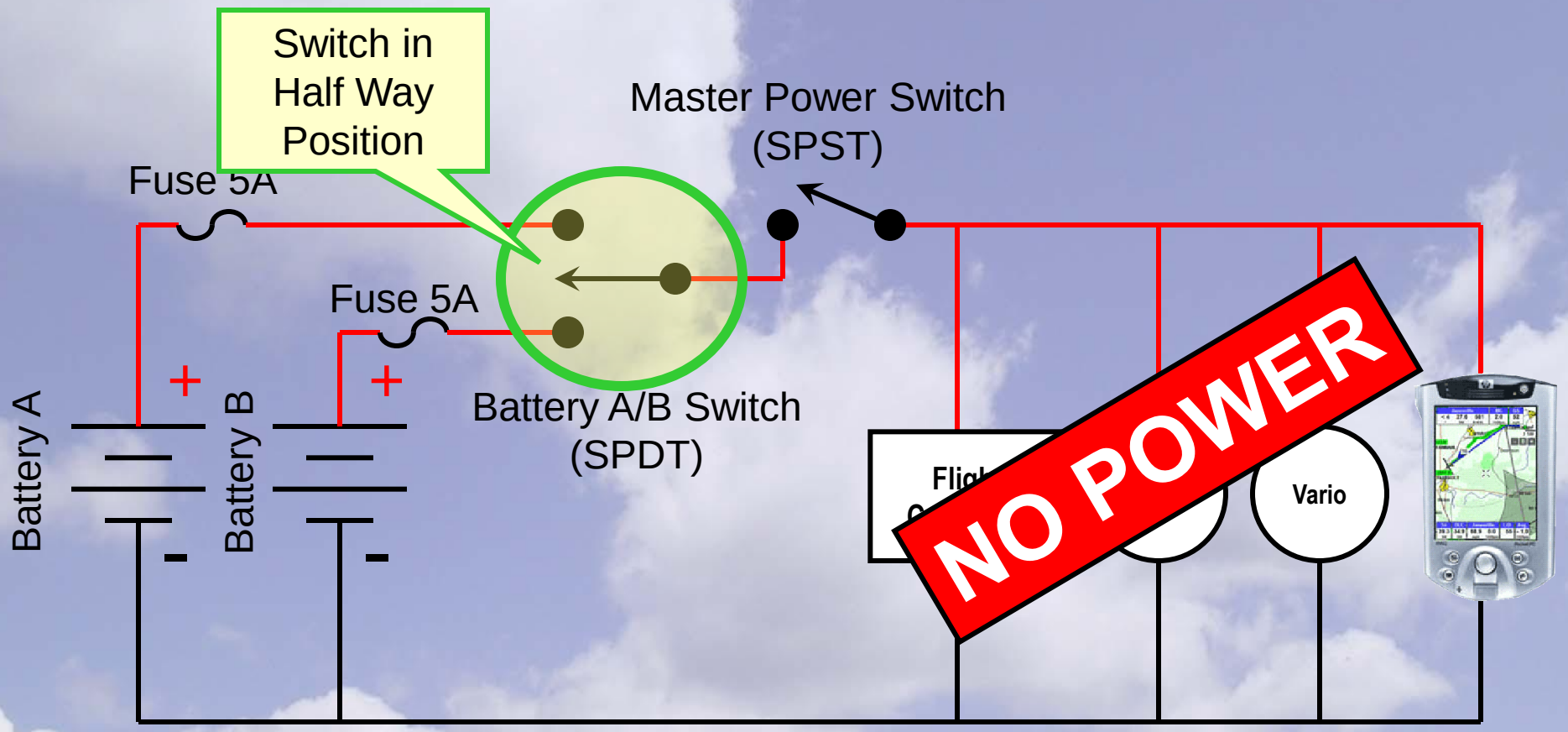

Note: Breakers can be used in place of Fuses

© 2012 John H. DeRosa

Sample Power Distribution Circuits

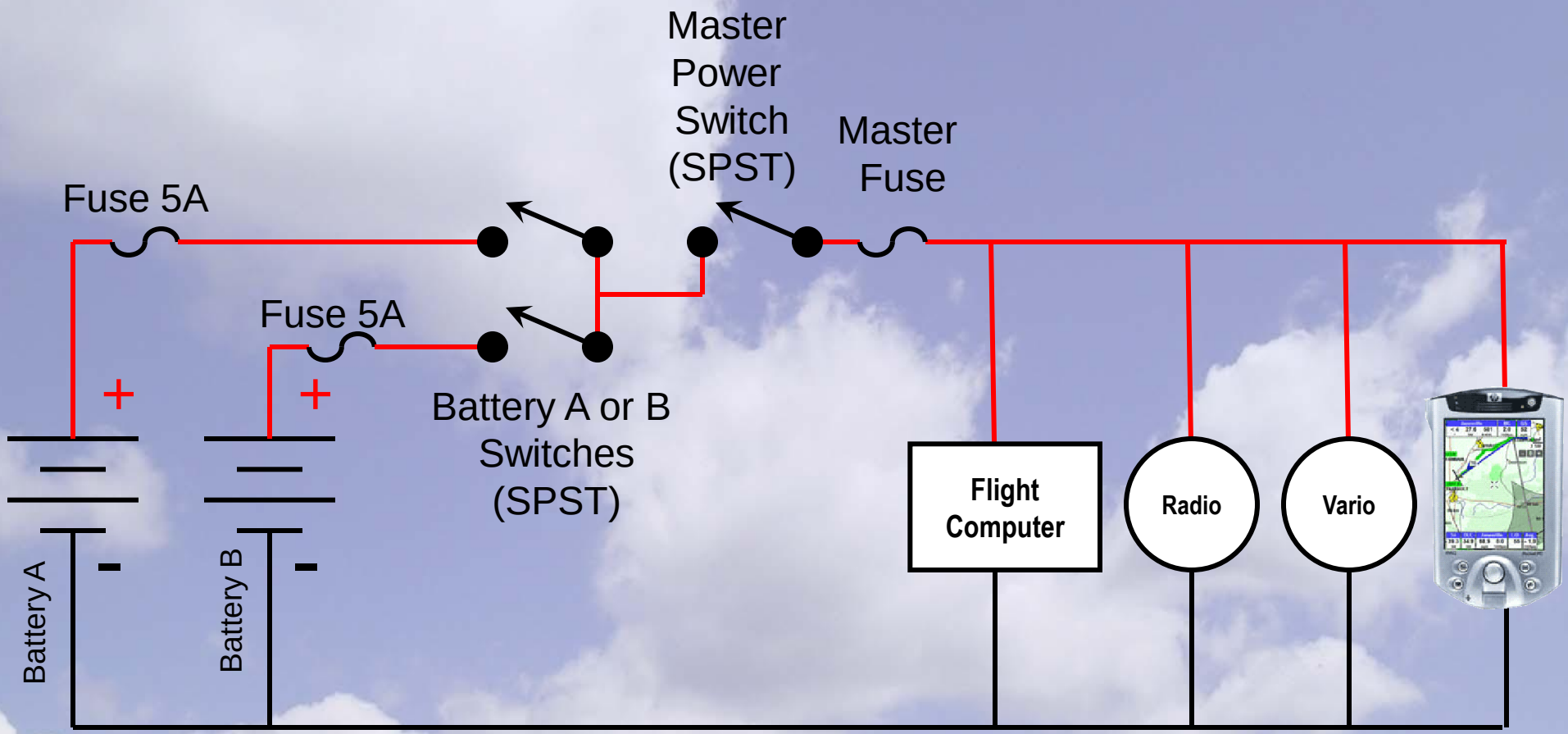

Note: Breakers can be used in place of Fuses

© 2012 John H. DeRosa

Sample Power Distribution Circuits

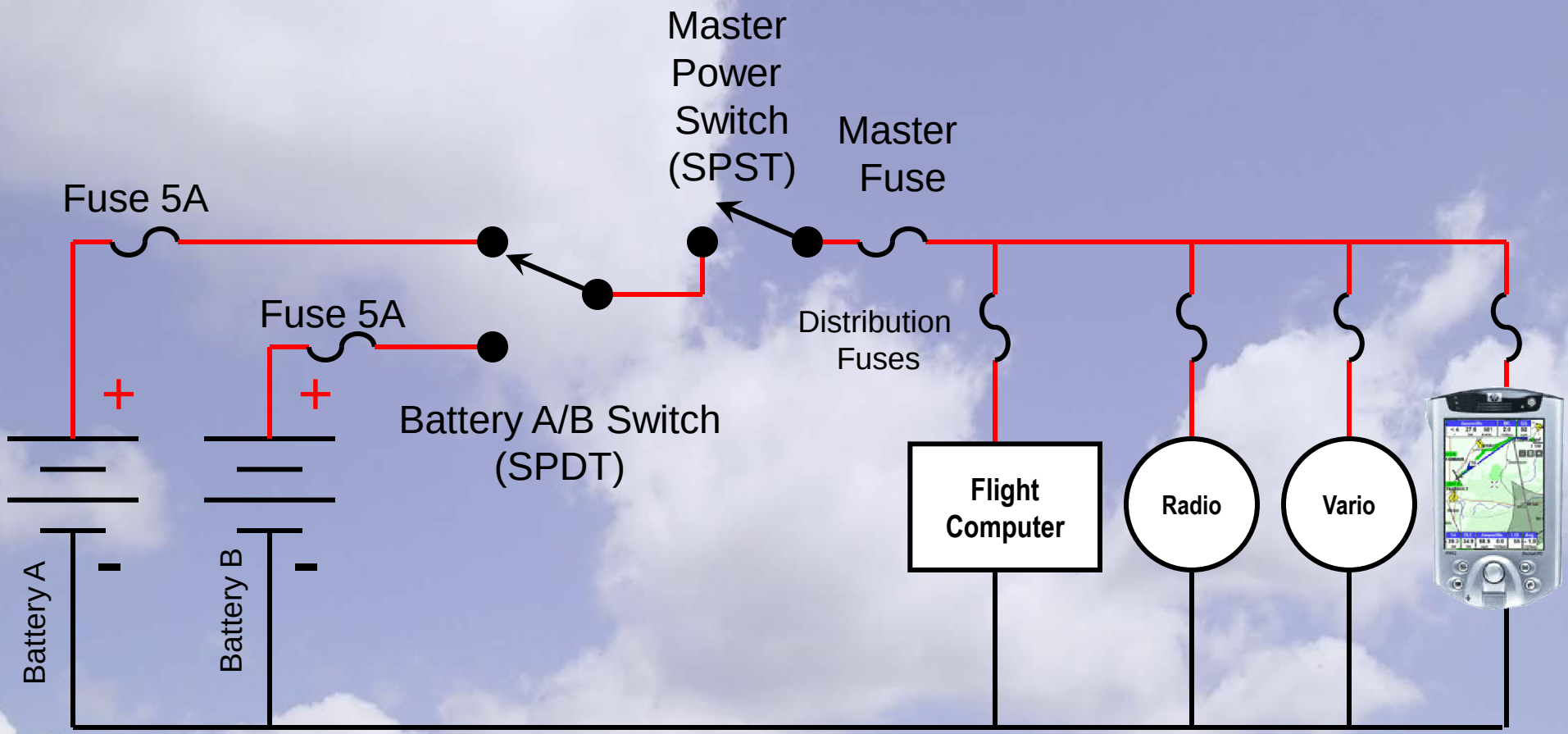

Note: Breakers can be used in place of Fuses

© 2012 John H. DeRosa

Sample Power Distribution Circuits

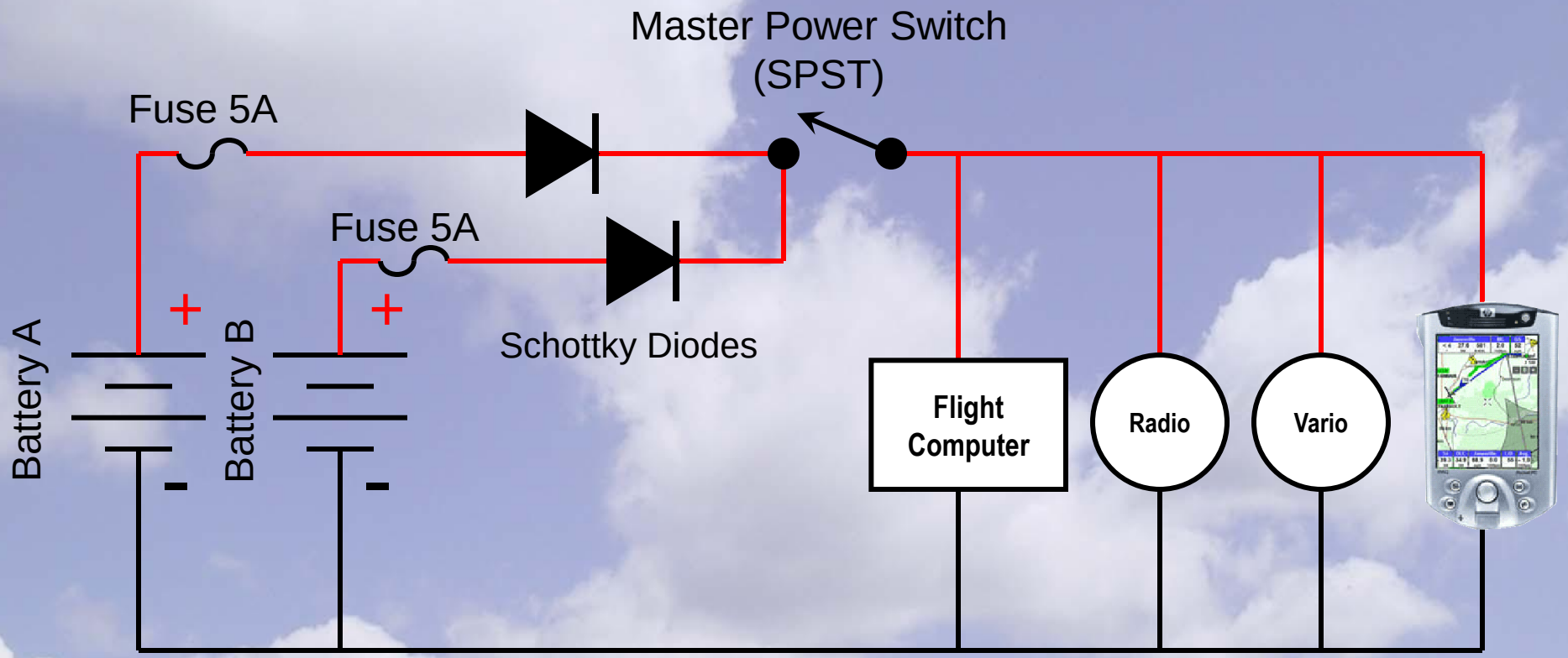

Note: Breakers can be used in place of Fuses

© 2012 John H. DeRosa

Do's and Don'ts

- No Ace H/W, no Radio Shack
- Wires - Tefzel only
- Terminals - Nylon
- Use sleeving at wear points
- Use good quality heat shrink
- Lacing vs. Nylon Cable Ties

© 2012 John H. DeRosa

Trailer Wiring 101

Trailer wiring and harness plugs are available in a variety of sizes and configurations. The most common and basic of designs is the color coded **4-wire** system. The "Flat-4" harness plug is found on almost all boat trailers and many smaller utility trailers that do not have electric brakes.

“Flat-4” or “4-Flat” Wiring

Green – Right Turn+Stop
Yellow – Left Turn+Stop
Brown – Tail+Marker
White - Ground

Vehicle	Trailer

© 2012 John H. DeRosa

Trailer Wiring 101

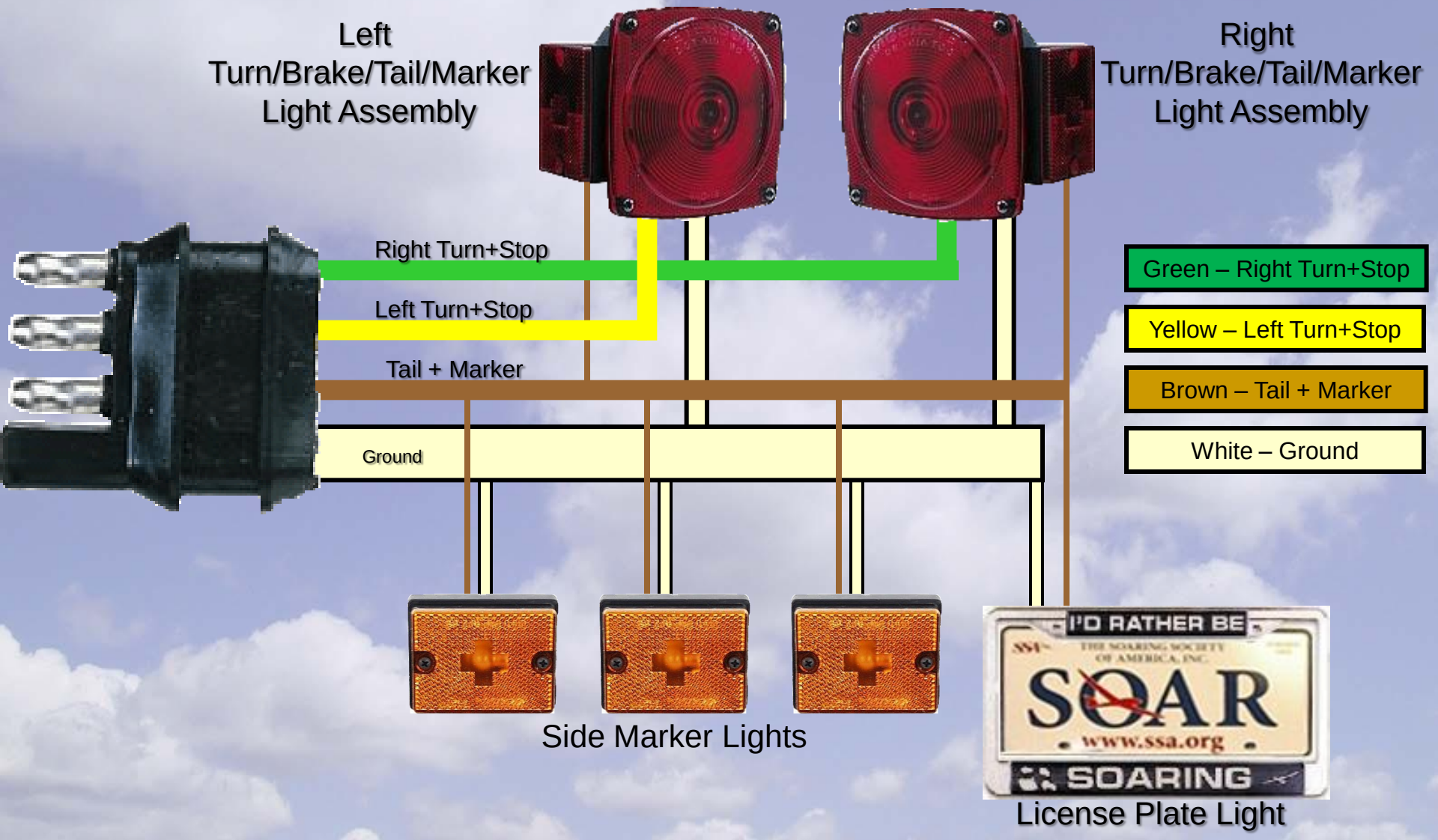

© 2012 John H. DeRosa

Trailer Wiring 101

© 2012 John H. DeRosa

Trailer Hints

- Use good quality lights
  - LED lights are more expensive but the trouble free choice
- Crimp terminals on all connections
  - No wire nuts, no spade terminals
- Good Ground Connections
  - Remove all rust or paint
- Use Dielectric Grease on Connections
  - Dow Corning #4 on all external connections
  - Especially useful on incandescent bulbs & sockets

- Use covers on all 4-Flat connectors when not in use to prevent corrosion. Use Dow Corning #4 there too.
- Run wires inside of trailer, frame or tubing to provide as much protection as possible
- Good reference web site: http://www.marksrv.com/wiring.htm

© 2012 John H. DeRosa

Aviation Electrical Parts Sources

http://www.wicksaircraft.com - Illinois (near St Louis)

http://wingsandwheels.com - New York

http://aircraftspruce.com - California & Georgia

http://wagaero.com - Wisconsin

http://www.steinair.com - Minnesota

http://www.airsuppliers.com - Texas

http://www.hi-line.com - Texas

http://www.kleintools.com – Illinois (near Chicago)

Hamfests
http://arrl.com

© 2012 John H. DeRosa

The End

Questions?

Email: john@derosaweb.net
Web: http://derosaweb.net

© 2012 John H. DeRosa